3 WHEEL MOBILITY SCOOTER MANUAL

TAIZHOU CHUNLAI ELECTRICAL CO.,LTD

CONTENTS

Introduction.....1
Riding safety.....2
List of parts.....3
Features.....4
Note to charging and battery.....12
Daily maintenance.....13
Trouble shooting guide.....14
Technical parameters.....15

Introduction

Dear Customer:

Welcome to join in the electric mobility scooter driver. To enjoy more safe and happy driving experience, you should be familiar with all contents in this operation instruction before driving. Your safety is not only related with your own alert&operating skill, but also related with if you know well about mechanical performance of this product. Each time, before driving, you should check it carefully. Besides, periodic maintenance is also very important. Please kindly note that only special repair station can know how to deal with the problem, and how to ensure optimum operation performance.

WARNING!!

1. Driving age should be according to local laws and ordinances that govern and/or restrict the use of electric mobility scooter. The laws and ordinances vary greatly from municipality to municipality, it is your responsibility to know and abide by your local restrictions.
2. Do not remove or dismantle the parts in private. Please contact with service center or dealer for replacement or repair parts.
3. Do not borrow the vehicle to anyone that not familiar to the riding process.
4. Avoid sudden stop or braking to prevent accident.
5. Avoid riding when drunk.

RIDING SAFETY

NOTES: 1. You must be aware of all local laws and ordinances that govern and/or restrict the use of electric scooter, and please obey local traffic laws and pay attention the safety on the road, check the scooter before driving.

1.Check whether the tyre pressure is normal before driving.

2.Always check if the brake works well.

3.Adjust your seat for easy operation.

4.Adjust the rear-view mirrors to your best visibility.

5.Check whether the battery is full before driving and start with low speed.

6.Slow down and avoid sudden braking in the turning.

7.Lock the scooter when you park.

CAUTION: Modification is illegal. A modified vehicle will affect its structure or performance, which will shorten the vehicle's life. Modified will not be covered by warranty. No guarantee can be provided if you buy no original spare parts.

List of parts

1. Head light
2. Front wheel
3. Front drum brake
4. Front shock absorber
5. Front turn light lamp
6. Rear view mirror
7. Brake lever
8. Charging port
9. Seat
10. Seat armrest
11. Rear turn light lamp
12. Rear storage
13. Motor
14. Rear wheel
15. Display
16. Thumb throttle/ rotating throttle
17. Support wheel

NOTES: 1. The above spare parts are only for reference. Any changes of spare parts or technology upgrades will presented to the final product without prior notice.
2. The picture is for reference only. Any discrepancy please adhere to the actual product instead.

15
7
12
16
11
17
13
14

6
10
1
9
5
8
2
3
4

FEATURES

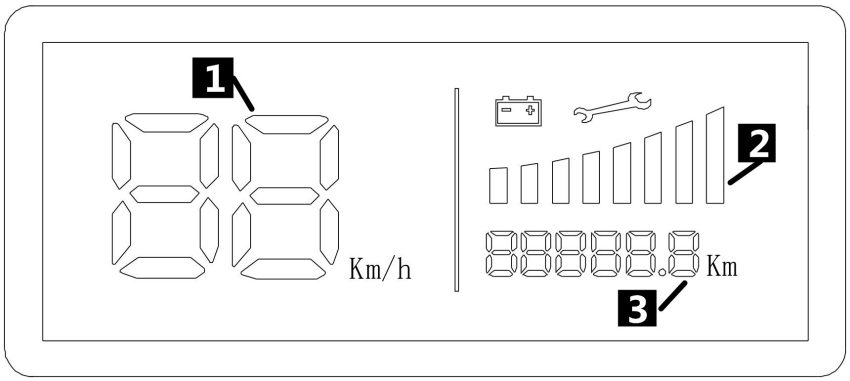

Display

1. Driving speed

The speedometer shows the speed in Km / h.

The trike is designed for a maximum speed of 15 km / h.

The tachometer deviation is +/- 3 km / h

2. Battery indicator

Eight vertical bars indicate the state of charge.

When the display shows only 3 bar, you should recharge the battery.

3. Mileage

switching on the ignition, the total kilometers driven are displayed.

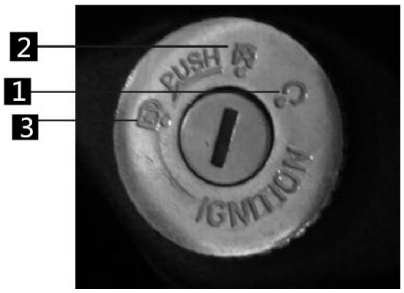

Ignition lock

1. Turning switch to this position, power on, vehicle can be drived, key can not be pulled out at this time.

2. Turning switch to this position, power off.

3. Turning switch to this position, pull out the key. At this time, steering operation is forbidden. The vehicle is locked.

The key is also used to open and close the top case and the trunk.

USB charging socket

Tilt the switch to On (I). Connect your phone or USB device to the USB port to charge your device.

Protection switch

This switch is in the seat, you must turn to ”ON” before driving the vehicle.

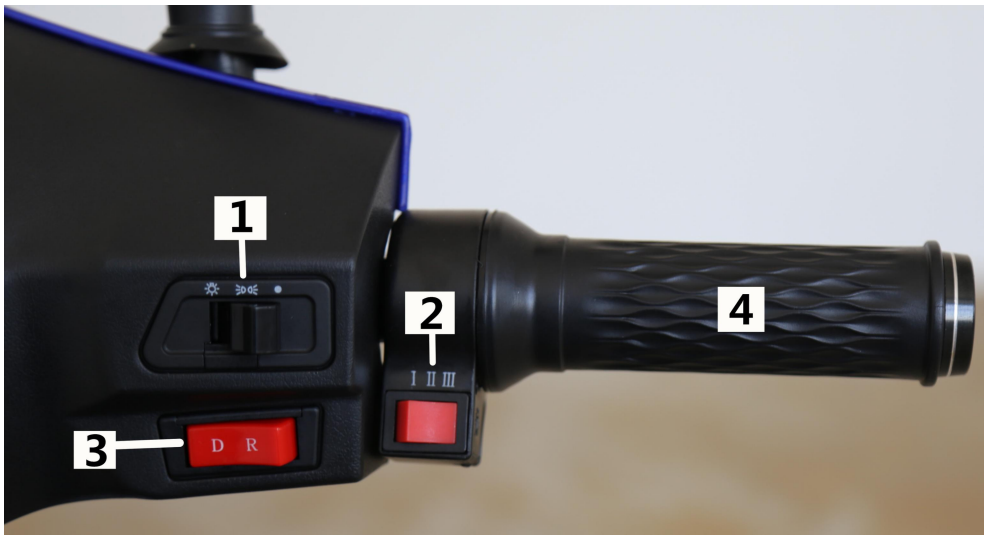

CL-06Z-60

1.Light switch

● At this position, head light is off.

At this position, position lamp, tail lamp and instrument lamp are illuminated.

At this position, head lamp is illuminated.

2. Speed switch

3. Driving/ reverse:

D-Driving gear& R-Reverse gear

4. Throttle

5. High beam light & low beam light

6. Turn light switch

● At this position, the turn light is off

← At this position, both front and rear left turn lights flash .

→ At this position, both front and rear right turn lights flash.

7. Horn

CAUTION: Check whether the throttle works well before driving.

Seat adjustment

Pull up the lever, adjust the seat by moving forward or backward.

CAUTION: You must keep the vehicle still when adjust the seat.
Make sure the seat is locked before driving.

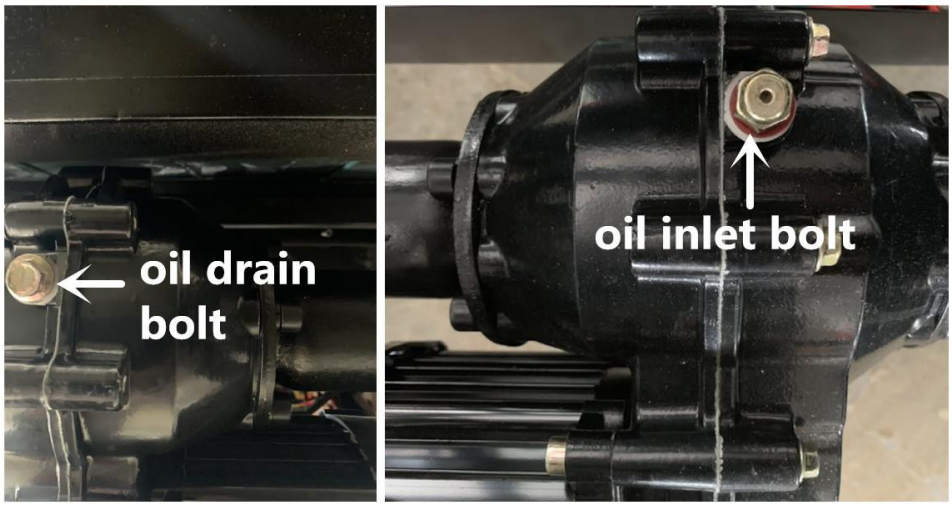

CL-06Z-60

Changing motor gear oil

Open oil drain bolt and oil inlet bolt, after the oil drained, screw on oil drain bolt, and pour the new oil into oil inlet, and screw on oil inlet bolt.

Changing Time

First time: about 1500km or 45days

Second time: 4500km or 90days

Low Viscosity Winter Gear Oils: From October to April

High Viscosity Summer Gear Oils: The rest months

The oil depends on the manufacturing date.

Brake

Replace the brake if you find it does not work well due to badly wear, especially for drum brake.

Tyre

Check the tyre before driving, if anything wrong, go to service station to fix it.

Replace the tyre if pattern depth reaches its limit **(front wheel:1.5mm,rear wheel:2.0mm)**

Keep correct tyre pressure **(front wheel: 250Kpa, rear wheel: 250Kpa)**

Note to charging and battery

1. The scooter uses the built-in charger and before charging, pull out the key, cut off the power and make sure the vehicle is locked.

2. Make sure the voltage is right before charging, and the standard voltage is 220V/110V.

3. It is charging when the light is red, and the charging time is around 1-12h.If fully discharged, it costs around 10-12h. If the light turn green, the power is full. Please keep power full, charging it at least one time per month even if you don't drive the vehicle.

4. During charging, the charger shall not be covered and shall be kept away from heat source, otherwise, the battery would be damaged.

5. During charging, the temperature of charger rise up is a normal phenomenon. However, if over 65℃, stop charging and check whether it is full.

6. Charger should be prevented contact with the liquid or metal material inside, pay attention to safety when charging.

7. Charging when discharging to 50-60% of battery capacity would decelerate its decay and improve its service life, and do not overcharge the battery, never over 24h.

8. The charger is a high-tech electronic product and shall not be arbitrarily opened, otherwise personal injury would be occurred.

9. Lower temperature would somehow impact the battery charging and discharging capacity and in winter the sustained mileage would be reduced, which is a normal phenomenon.

10. Avoid exposing the vehicle to the hot sun, high temperature will reduce the battery life.

11. Avoid accelerating rapidly when the scooter just started, or go uphills, which could help to protect the battery.

12. The battery in the scooter is merely applicable to our own charger. Any other charger shall not be used, or else the battery would be damaged.

13. If the mileage is greatly reduced in short time, it is very possible that one piece of the battery has problem, please go to service station to check and repair.

Daily Maintanence

1.Please regularly wipe the scooter and keep it clean. However, do not flush the electric parts and driving parts with water.

2.Please avoid putting the scooter under the sun, high temperature and wet environment place. In case of the rainy day outdoor, please protect the rotary handles, battery box and control box.

3.Don’t arbitrary reassemble or reform the scooter and use the unqualified parts.Please purchase the wearable parts in our authorized service center.

4.Regularly check the brake, fasteners, and wearable parts whether loose and make timely repair in case of trouble found. Check all the lubricated parts whether is oiling, such as damper.

5.During driving, one should always check if wheels on normal rotation, tyre on sufficient pressure, brake on normal function, brake disc or brake drum for serious were-out and indication lamps for being normal.

6.During driving, keep away pointed objects on road, or the tyre would be punched.

7.The scooter shall be stand steadily to avoid over-turn.

TROUBLE SHOOTING GUIDE

	Troubles	Possible cause	Corrective measures
1	When turn on the power switch and adjust the speed handlebar, failed to start the vehicle	1.Loosing of motor connection plug 2.Loosing of battery's connection line 3.The bake disc or drum is not reset and is under the brake power-off state	1.Surely insert the plug 2.Surely fix the connection 3.Reset the brake disc or drum
2	Failure of speed adjustment or not free rotation of handle	1.loosing of adjustment handle plug 2.Loosing of magnet of adjustment handle	1.Surely insert 2.Solder and connect the wire 3.Replace fuse of the same specification
3	Charger fails to charge	1.Loosing of plug and socket of charge 2.Loosing of connection lines of battery set 3.The battery box charging fuse burnt	1.Surely insert 2.Solder and connect the wire 3.Replace fuse of the same specification
4	At charging, after inserting to power supply, the indication lamp fails to light on	Check of network	Power supply
5	Short sustained mileage of one cycle of charger	1.Insufficient charging of battery 2.Decay or damaged battery 3.Frequent braking or driving against wind or upslope	1. Sufficiently charge 2. Replace battery 3. Aids with pedal at this case
6	Other troubles	1.Abnormalities in hub motor, controller charger or battery 2.Other trouble impossible judge	Ask dealers or the authorized maintenance centers, not arbitrarily open and repair.

NOTE: If other problems occur, do not attempt to disassemble the scooter on your own, please proceed to the authorized dealer.

TECHNICAL PARAMETERS

NOTE: Under different models, the parameters of your electric motor technology may be related to the above list is different.

Model	J1000
LxWxH	1520×670×1020mm
Wheel base	1030mm
Weight	105kg
Standard load	110kg
Max speed	23±2km/h
Mileage	50±5km
Battery	Lead acid
Battery type	60V 20Ah
Motor	Brushless motor
Motor power	1000W
Trye	3.00－10
Charging time	6-8h
Undervoltage protection value of controller	52V
Overcurrent protection value of controller	30A
Climbing angle	＞20°
Charging current	2.8-3A